PLAT OF LOT SPLIT
SITUATED IN THE CITY OF AVON, COUNTY OF LORAIN AND STATE OF OHIO:
KNOWN AS BEING PART OF ORIGINAL AVON TOWNSHIP SECTION NO. 16 AND
FURTHER KNOWN AS BEING A LOT SPLIT OUT OF P.P.N. 04-00-016-102-005 OF
LAND CONVEYED TO BBS LAND INVESTMENTS BY INSTRUMENT NO. 20030914044
OF LORAIN COUNTY RECORDS

AUGUST, 2006
SCALE 1 INCH = 100 FEET

GRAPHIC SCALE
100 0 50 100 200 400
(IN FEET)
1 inch = 100 ft.

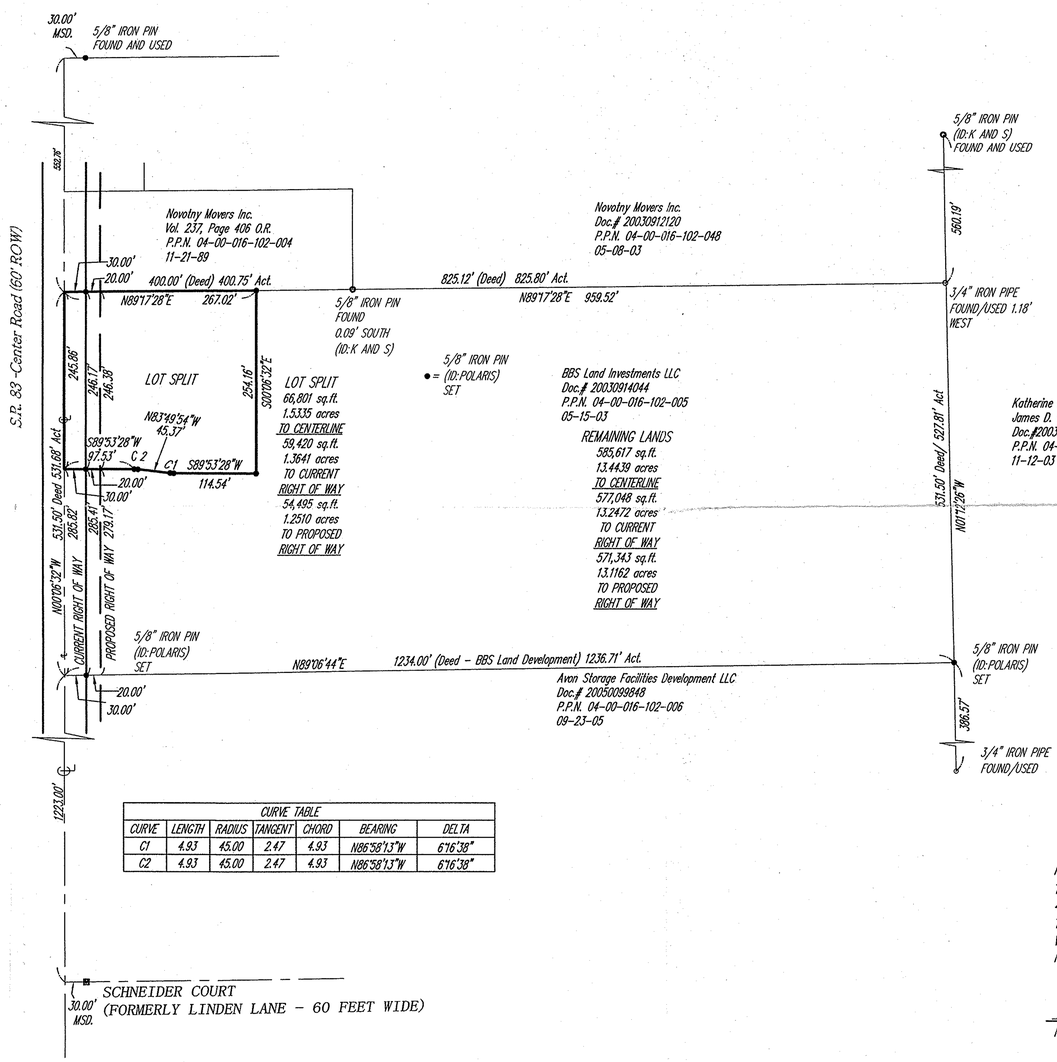

CURVE TABLE						
CURVE	LENGTH	RADIUS	TANGENT	CHORD	BEARING	DELTA
C1	4.93	45.00	2.47	4.93	N86°58'13"W	6°16'38"
C2	4.93	45.00	2.47	4.93	N86°58'13"W	6°16'38"

No 02214
APPROVED LORAIN CO. SANITARY
8-30-06
4-00016-C
JHHfield
#06-02214

SURVEYOR CERTIFICATION

I HEREBY CERTIFY THAT I HAVE SURVEYED THE PREMISES AND PREPARED THE ATTACHED PLAT IN ACCORDANCE WITH THE PROVISIONS OF CHAPTER 4733-37 OF THE OHIO ADMINISTRATIVE CODE AND THE DIMENSIONS OF THE LOTS AND ROAD ARE IN FEET AND DECIMAL PARTS THEREOF, ALL OF WHICH ARE CORRECT TO THE BEST OF MY KNOWLEDGE AND BELIEF. IRON MONUMENTS OR PINS AS INDICATED WERE FOUND OR SET AS SHOWN HEREON.

Michael P. Spellacy 08-07-06
MICHAEL P. SPELLACY P.S. #8169 DATE

STATE OF OHIO MICHAEL P. SPELLACY S-8169 REGISTERED PROFESSIONAL SURVEYOR

REV. No.		DATE	BY	CH'K'D

DATE: 7/12/06
SCALE: HOR. 1"=20'
VERT. N/A
FOLDER: PLATS
FILENAME: LOT SPLIT
TAB: LOT SPLIT
DRAWN: MPS

BBS INVESTMENTS, LLC.
CENTER ROAD (S.R. 83)
CITY OF AVON - LORAIN COUNTY - OHIO

polaris Engineering & Surveying

POLARIS ENGINEERING & SURVEYING, INC.
34600 CHARDON ROAD - SUITE D
WILLOUGHBY HILLS, OHIO 44094
(440) 944-4433 (440) 944-3722 (Fax)
www.polaris-es.com

PART OF ORIGINAL
AVON TOWNSHIP
SECTION 16

CONTRACT No. 05-787

SHEET	OF
1	1