OVERALL SITE LAYOUT

for

ERIC V. & DAWN CORCINO

SITUATED IN THE TOWNSHIP OF SHEFFIELD, COUNTY OF LORAIN, STATE OF OHIO AND KNOWN AS BEING PART OF ORIGINAL SHEFFIELD TOWNSHIP LOT NUMBER 108 AS DESCRIBED IN DEEDS TO MARION B. GAW AS RECORDED ON JUNE 29, 1993 IN O.R. VOLUME 730, PAGE 242 AND TO ERIC V. & DAWN CORCINO AS RECORDED ON NOVEMBER 15, 2002 IN DOCUMENT NUMBER 20020869901 OF THE LORAIN COUNTY DEED RECORDS, CONTAINING 1.8281 ACRES OF LAND, BEING THE SAME MORE OR LESS, BUT SUBJECT TO ALL LEGAL HIGHWAYS AND EASEMENTS.

CURVE TABLE

Label	Radius	Length	Chord	Bearing	Tangent	Delta
C1	2546.66'	100.00'	99.99'	N 01°15'39" E	50.00'	02°14'59"
C2	1909.79'	130.83'	130.80'	N 01°49'36" W	65.44'	03°55'30"
C3	2542.70'	100.01'	100.00'	N 04°54'51" W	50.01'	02°15'13"
C4	2586.66'	17.51'	17.51'	S 02°11'31" W	8.75'	00°23'16"
C5	2586.66'	65.85'	65.85'	S 01°16'07" W	32.93'	01°27'31"
C6	2586.66'	18.21'	18.21'	S 00°20'15" W	9.10'	00°24'12"
C7	1949.79'	104.87'	104.86'	S 01°24'18" E	52.45'	03°04'54"
C8	1949.79'	28.69'	28.69'	S 03°22'03" E	14.35'	00°50'36"
C9	2582.70'	31.24'	31.24'	S 04°08'03" E	15.62'	00°41'35"
C10	2582.70'	59.94'	59.94'	S 05°08'44" E	29.97'	01°19'47"
C11	2582.70'	10.07'	10.07'	N 04°22'08" W	5.04'	00°13'25"

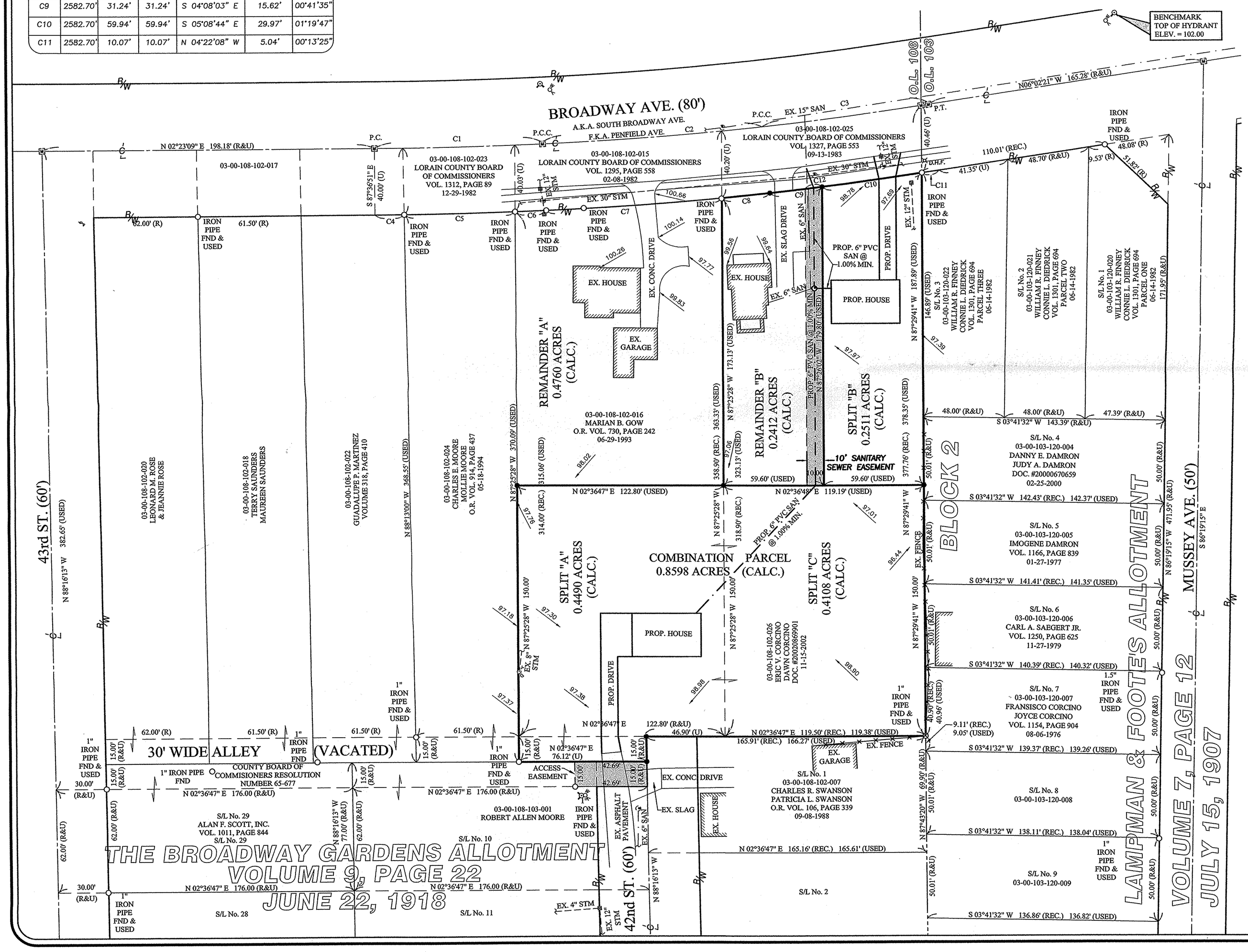

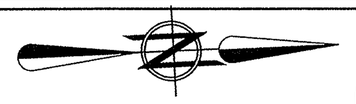

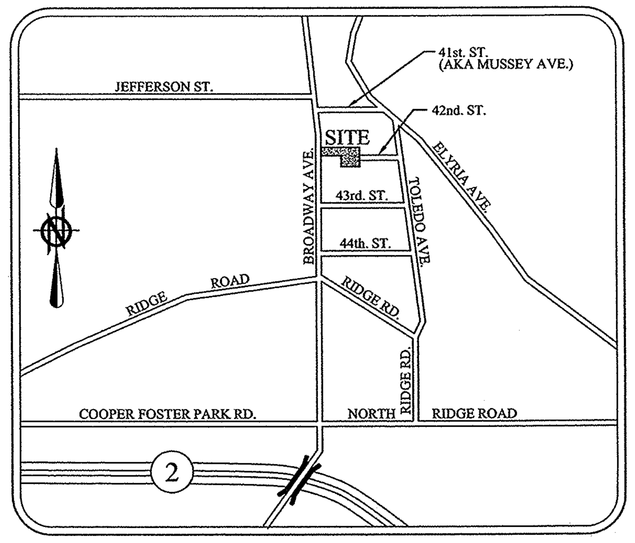

LOCATION MAP NTS

BASIS OF BEARINGS:
THE CENTERLINE OF BROADWAY AVE. ASSUMED TO BE N 02°23'09" E

LEGEND OF SYMBOLS AND LINETYPES:

- ○ PIPE/PIN FOUND AS DESCRIBED
- ● 5/8" REBAR WITH CAP STAMPED "BRAMHALL" SET
- MONUMENT BOX W/ 1" IRON PIN FOUND & USED
- (REC.) (R) RECORD
- (U) USED
- (M) MEASURED
- (CALC.) (C) CALCULATED
- CENTERLINE
- PROPERTY LINE
- ORIGINAL LOT LINE
- RIGHT-OF-WAY LINE
- EXISTING SANITARY
- PROPOSED SANITARY

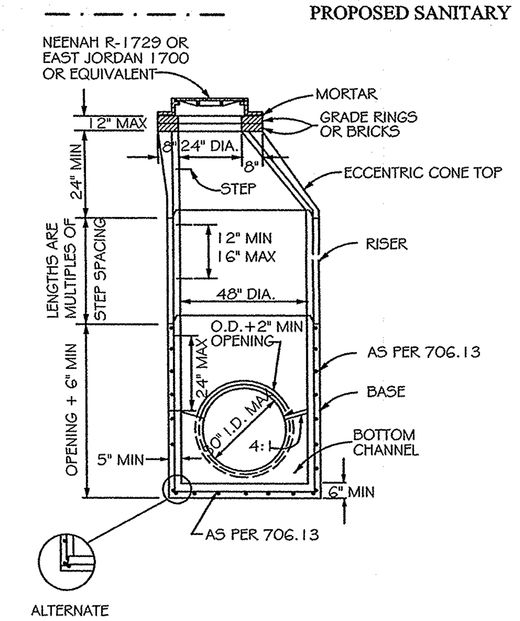

48" PRECAST BASE FOR 30" AND SMALLER PIPE

NOTE:
PROPOSED HOUSES, DRIVES & SANITARY PIPES & MANHOLE ARE SHOWN FOR DIAGRAMMATICAL PURPOSES ONLY AND SHALL NOT BE USED FOR CONSTRUCTION.

DATE	DESCRIPTION
4/14/03	ISSUE TO CLIENT

DRAWN BY: DDW
CHECKED BY: CMH

BRAMHALL
ENGINEERING AND SURVEYING CO., INC.
37307 HARVEST DRIVE AVON, OHIO 44011
(440) 934 - 7878 (440) 934 - 7879 FAX

SHEET 1 OF 1
JOB NO. 03-1526

03-00-108-105