LOT SPLIT SURVEY

for

VICTORY LANE LAND COMPANY

SITUATED IN THE TOWNSHIP OF LaGRANGE, COUNTY OF LORAIN, STATE OF OHIO AND KNOWN AS BEING PART OF ORIGINAL LaGRANGE TOWNSHIP LOT NUMBER 77.

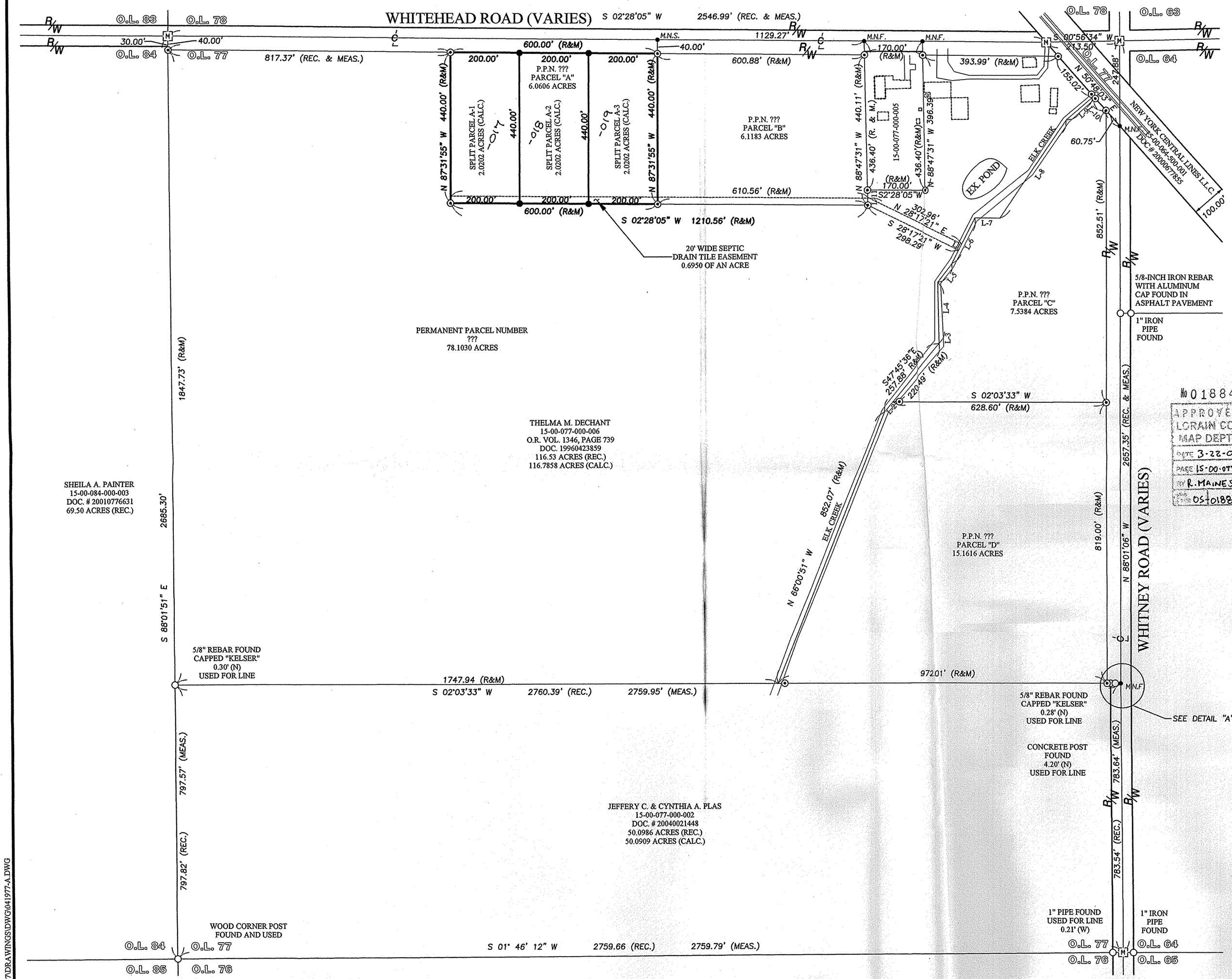

TABLE OF OWNERSHIP

15-00-077-000-005
FRANK & NANCY HAMZA
O.R. VOL. 139, PAGE 142
1.703 ACRES (REC.)
1.7027 ACRES (CALC.)

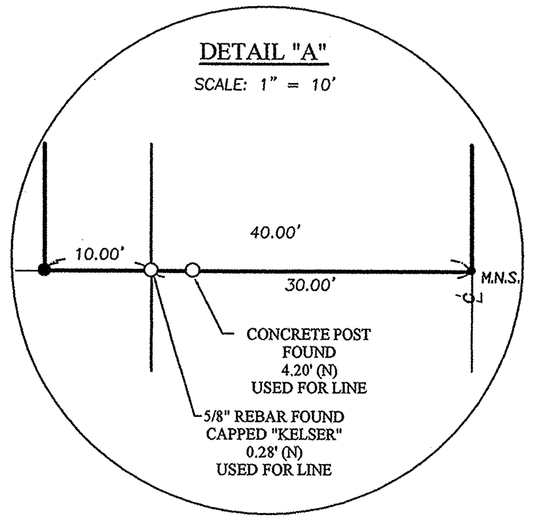

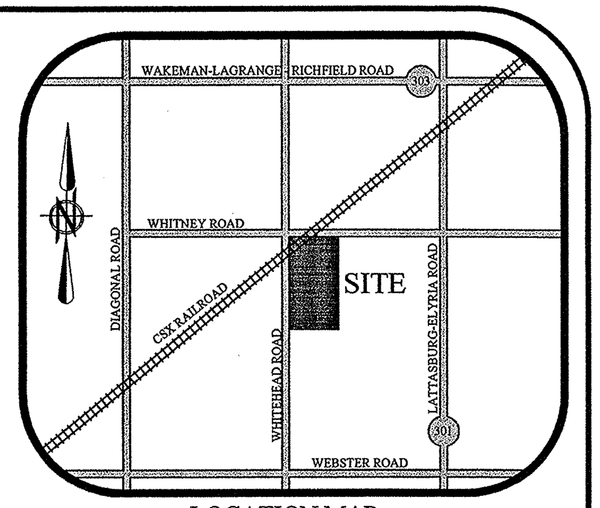

LOCATION MAP

BASIS OF BEARINGS:

A PORTION OF THE CENTERLINE OF WHITEHEAD ROAD WHICH WAS ASSUMED TO BE SOUTH 02° 28' 05" WEST AS SURVEYED IN NOVEMBER OF 2004

GRAPHIC SCALE

0 150 75 300

(IN FEET)
SCALE: 1"=150'

TABLE OF LINES

LINE	BEARING	DISTANCE
L-1	S 61° 42' 39" E	20.00'
L-2	N 47° 45' 36" W	37.39'
L-3	N 89° 04' 49" W	31.55'
L-4	N 89° 04' 49" W	148.28'
L-5	N 50°42'18" W	64.99'
L-6	N61° 27' 00" W	152.86'
L-7	S 02° 03' 33" W	72.40'
L-8	N 54° 01' 26" W	345.45'
L-9	N 39° 16' 37" W	106.42'
L-10	N 50° 48' 03" E	54.88'
L-11	N 88° 47' 31" W	43.72'

LEGEND OF SYMBOLS AND LINETYPES

℄	CENTERLINE OF RIGHT-OF-WAY
○	IRON PIPE OR PIN FOUND AS INDICATED
●	5/8" REBAR W/CAP STAMPED "BRAMHALL 8073" SET
⊙	5/8" REBAR W/CAP STAMPED "BRAMHALL 8073" FOUND AND USED
● M.N.F.	MASONRY NAIL FOUND
P.O.C.	POINT OF COMMENCEMENT
T.P.O.B.	TRUE PLACE OF BEGINNING
—x—	FENCE
(F) (FND.)	FOUND
(R) (REC.)	RECORD
(M) (MEAS.)	MEASURED
R/W	RIGHT-OF-WAY LINE
[M]	5/8-INCH IRON REBAR WITH ALUMINUM CAP IN A MONUMENT BOX FOUND & USED

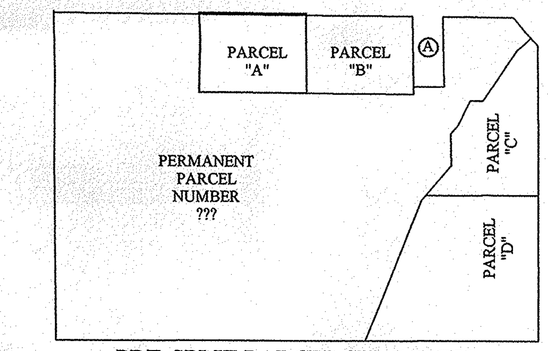

PRE-SPLIT PARCEL SUMMARY

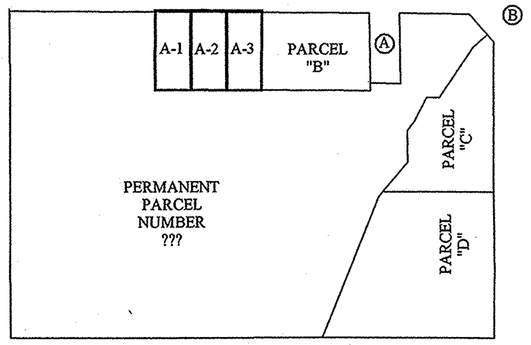

POST-SPLIT PARCEL SUMMARY

SURVEYOR'S CERTIFICATE:

THIS IS TO CERTIFY THAT AT THE REQUEST OF THE OWNERS I HAVE SURVEYED AND PLATTED THE BOUNDARY SURVEY AS SHOWN HEREON, SITUATED IN THE TOWNSHIP OF LaGRANGE, COUNTY OF LORAIN, STATE OF OHIO AND KNOWN AS BEING A PARCEL OF LAND DESCRIBED IN A DEED TO VICTORY LANE LAND DEVELOPMENT AS RECORDED IN DOC. # OF THE LORAIN COUNTY DEED RECORDS, CONTAINING 6.0606 ACRES OF LAND IN ORIGINAL LaGRANGE TOWNSHIP LOT NUMBER 77, BE THE SAME MORE OR LESS, BUT SUBJECT TO ALL LEGAL HIGHWAYS AND EASEMENTS. AT ALL POINTS THUSLY INDICATED ○ IRON PIN MONUMENTS WERE FOUND AND AT ALL POINTS THUSLY INDICATED ● IRON PIN MONUMENTS WERE SET. DISTANCES ARE SHOWN IN FEET AND DECIMAL PARTS THEREOF. BEARINGS SHOWN ARE ASSUMED AND USED TO DESCRIBE ANGLES ONLY. THE PLAN REPRESENTS A SURVEY IN WHICH A TRAVERSE OF THE EXTERIOR BOUNDARIES OF THE TRACT AND EACH BLOCK COMPUTED FROM FIELD MEASUREMENTS OF GROUND CLOSED WITHIN A LIMIT OF ERROR OF ONE (1) FOOT TO TEN THOUSAND (10,000) FEET OF THE PERIMETER BEFORE BALANCING THE SURVEY. ALL OF WHICH I CERTIFY TO BE CORRECT.

Christopher M. Hirzel 01/12/2005

CHRISTOPHER M. HIRZEL, P.S.
REGISTERED SURVEYOR NO. 8081

DATE

STATE OF OHIO
CHRISTOPHER HIRZEL
S-8081
REGISTERED
PROFESSIONAL SURVEYOR

№ 01884
APPROVED
LORAIN CO.
MAP DEPT.
DATE 3-22-05
PARCEL 15-00-077-A
BY R. MAINES
05-01884

REVISION	DATE:	BY:	DESCRIPTION:
	11-29-2004	CMH	ISSUE FOR REVIEW
	12-7-2004	CMH	ISSUE FOR REVIEW
	12-15-2004	CMH	REVISED PER LAGRANGE TOWNSHIP REQUEST
	01-12-2005	CMH	REVISED SPLIT C-3

J:\041977\DRAWINGS\DWG\041977-A.DWG

DRAWN BY: AMK

CHECKED BY: CMH

BRAMHALL
ENGINEERING AND SURVEYING CO., INC.
37307 HARVEST DRIVE AVON, OHIO 44011
(440) 934 - 7878 (440) 934 - 7879 FAX

SHEET 1 OF 1

JOB NO. 04-1977