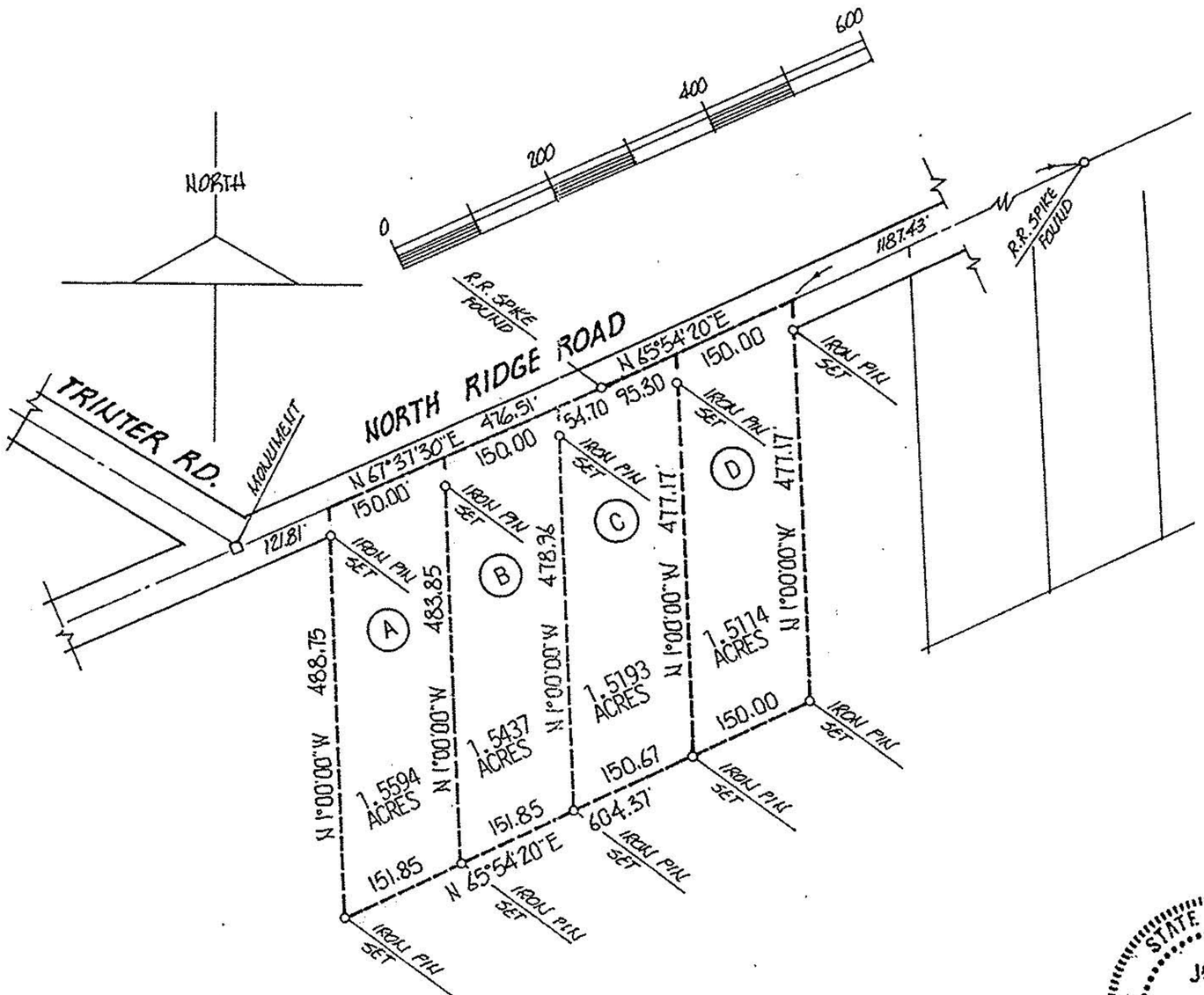

DESCRIPTION, PARCEL "A":

SITUATED in the Township of Brownhelm, County of Lorain and State of Ohio. Being known as part of Original Lot 64 of said Township, bounded and described as follows;

BEGINNING at a point in the centerline of North Ridge Road being North 67°37'30" East a distance of 121.81 feet from a monument at its intersection with the centerline of Trinter Road.

THENCE North 67°37'30" East along the centerline of North Ridge Road, a distance of 150.00 feet to a point. THENCE South 1°00'00" East, a distance of 483.85 feet to an iron pin, said line passing through an iron pin set in the southerly line of North Ridge Road. THENCE South 65°54'20" West, a distance of 151.85 feet to an iorn pin. THENCE North 1°00'00" West, a distance of 488.75 feet to the place of beginning, passing through an iron pin set in the southerly line of North Ridge Road, embracing 1.5594 acres of land, but being subject to all legal highways, as surveyed by John A. Burkin, November, 1995.

STATE OF OHIO
JOHN A. BURKIN 6721
REGISTERED SURVEYOR

P.P.N 01-00-064-000-070

PERIMETER SURVEYS FOR
PARCEL SPLIT APPROVALS
PART OF ORIGINAL LOT 64
BROWNHELM TOWNSHIP, LORAIN CO., OHIO
NOVEMBER, 1955 SCALE 1"= 200 FT.
JOHN A. BURKIN, REGISTERED SURVEYOR