11

PLAT

Showing proposed widening of Pearl Avenue by addition of a strip of land lying next East of the East Line of said Avenue Said strip is shown hereon in red shade and dimensions are shown in feet and decimals of a foot. the land is taken from Original Lots 101 and 106 in Sheffield Town. ship Lorain County Ohio as follows

From Lot 101	0.52 AC
" " 106	0.37 "
Total	0.89 "

Nichols & Loughborow
Surveyors and Civil Engrs

This is to Certify that in accordance with Section 6886 of the General Code of Ohio (Ohio Laws Volume 105-106 - at page 582) We the Undersigned Grantors hereby dedicate the Lands described in this plat which are the same Lands described in the deed attached hereto to the public for road purposes

Done at Cleveland Ohio this 7 day of November 1917

SEAL

THE GUARANTEE TITLE AND TRUST Co

by P. D. Jones Vice President
W. C. Cunningham Secretary

Signed sealed and acknowledged in presence of
Jno. M. Kramer
E. B. Parsons

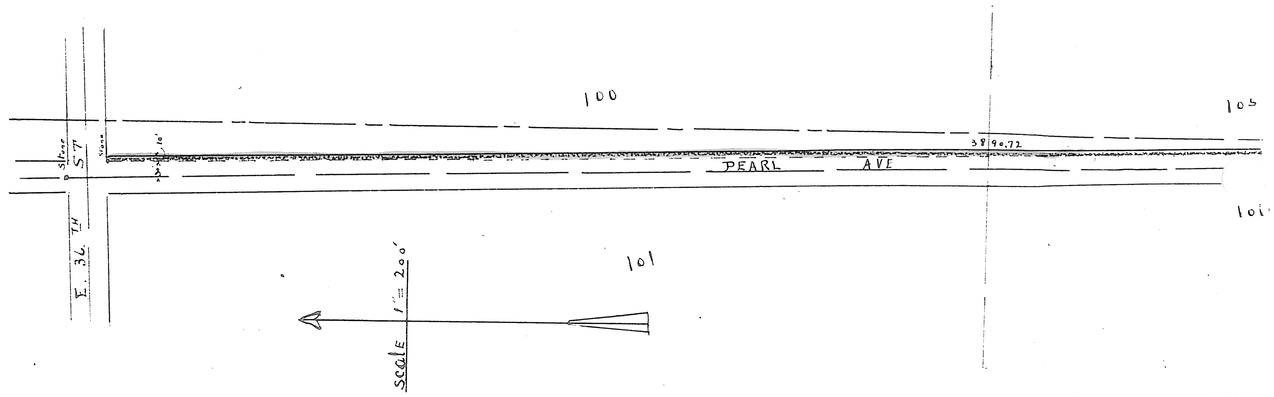

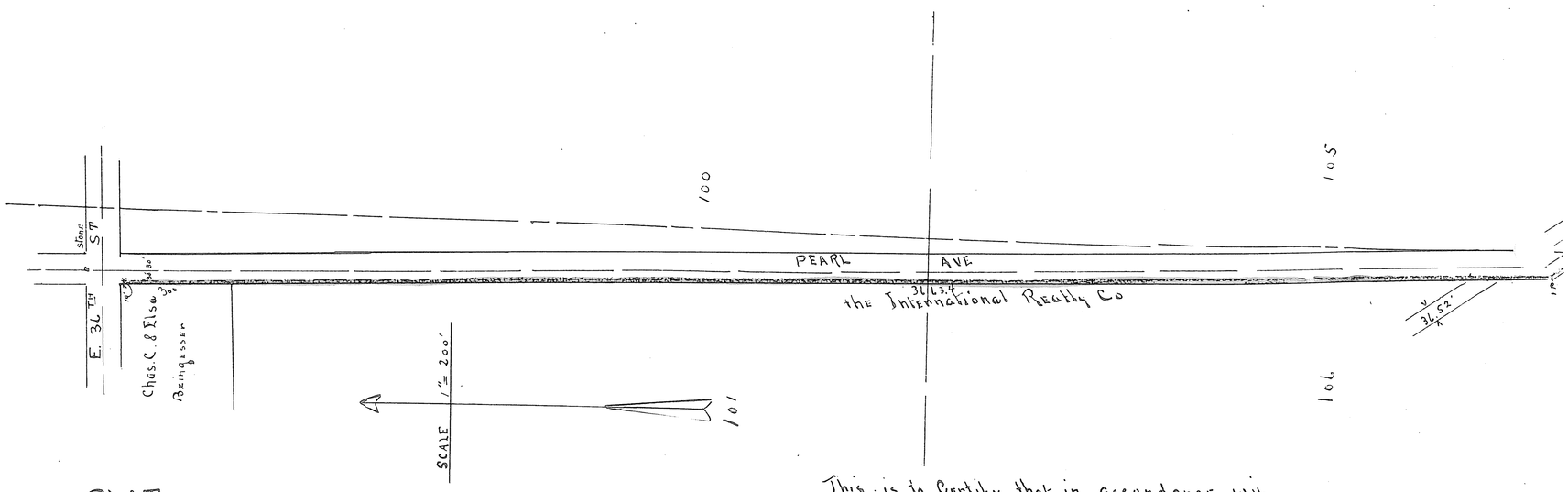

PLAT.

Showing proposed Widening of Pearl Avenue by Addition of a strip of Land lying next West of the West Line of said Avenue. Said Strip is shown hereon in red shade and dimensions are given in feet and decimals of a foot. the land is taken from Original Lots 101. 106. 105 and 110 in Sheffield Township Lorain County Ohio as follows

From Lot 101	0.52 Ac
" 106	0.43 "
" 105	0.16
" 110	0.43
Total	1.54

Nichols & Loughborow
Surveyors & Civil Engrs

This is to Certify that in accordance with Section 6886 of the General Code of Ohio (Ohio Laws Volume 105-106 at page 582) We the Undersigned grantors hereby dedicate the Lands described in this plat which are the Same Lands described in the Deed Attached hereto, to the public for road purposes
Done at Lorain Ohio this 6 day of November 1917

the International Realty Co
By S. J. Wertz Pres
C. W. Brainard Sec'y
Chas C. Beingessner
Elsa Beingessner

SEAL

Signed Sealed and Acknowledged in presence of
James F. Hartley
John M. Harding

http://www.adultpdf.com
Created by TIFF To PDF trial version, to remove this mark, please register this software.

VOL 9 PG 11 (515)

91548

State of Ohio
County ss Before me a
Notary Public in and for Said County
personly appeared the above named
The Guarantee Title and Trust Co a Corporation by
its Vice President and " Secretary
and they the said Vice President and
Secretary Acknowledged that they did
Sign and Seal the foregoing Plat and that
the Same is their free act and deed
as Officers of Said Corporation
In Witness Whereof I have hereunto set my hand
and affixed my Official Seal This 7 Day of
November 1917

E B. Ramond
Notary Public

SEAL

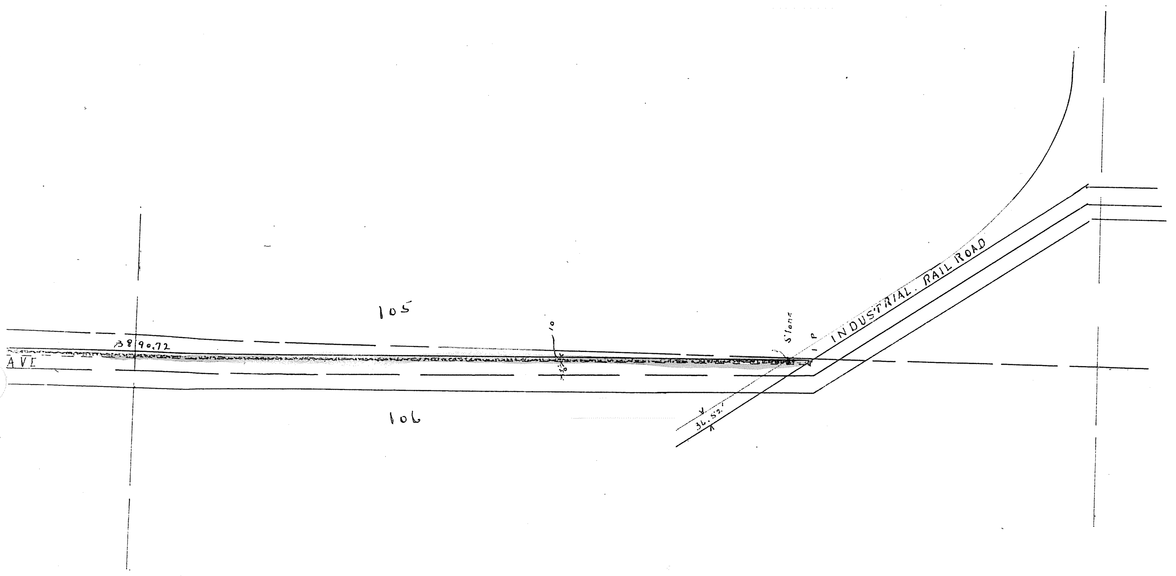

Accepted and approved this 19 Day
of Nov. 1917

O G Dunn
S A. Beal
A E Hale
} Commissioners of Lorain County Ohio

Rec. for Record.
Nov. 20th 1917 1:03 PM 1917
Recorded Nov. 21. 1917

Frank a Irish Recorder
Fees 5.95

91547

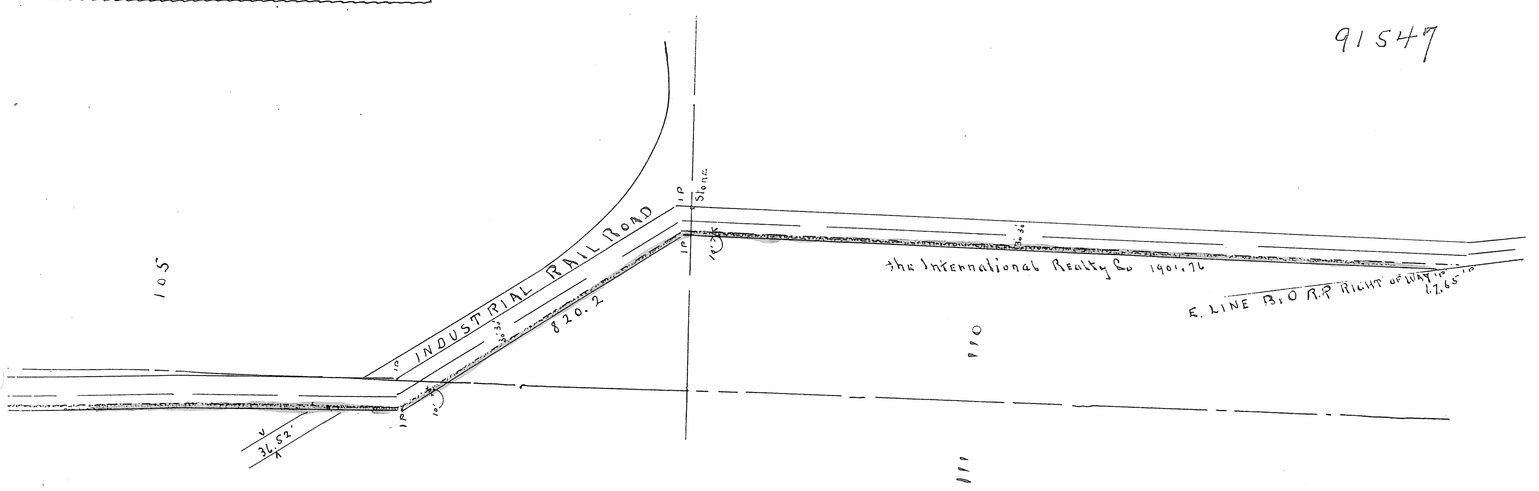

State of Ohio Lorain County. S.S.
Before me a Notary Public in and for Said County
personally appeared the above named the International
Realty Co by its President and Secretary and Chas C Beingesser
and Elsa. Beingesser Who Acknowledged that they did Sign the
foregoing plat and that the Same is their free act and deed.
In Witness Whereof I have hereunto set My hand and affixed My
Official Seal this 14 day of November 1917

John M Harding
Notary Public

SEAL

Accepted and approved this
19th day of Nov. 1917

O G Dunn
S A Beal
A E Hale
} Commissioners of Lorain County Ohio

Rec. for Record
Nov. 20th 10:2 P.M. 1917
Recorded Nov. 21 1917

Frank a Irish
Recorder

Fees 6.45

ce with
o
ij
ediate
ane the
hed
es
mber 1917

Fro
ny

SEAL

edged in
Harley
Harding

VOL 9 PG 11 (515)